Absen

Trusted LED Supplier

K V3 Series

Connect Creatively, Unleash Imagination

K V3 Series

K1.5 V3 / K1.8 V3 / K2.5 V3 / K3.9 V3

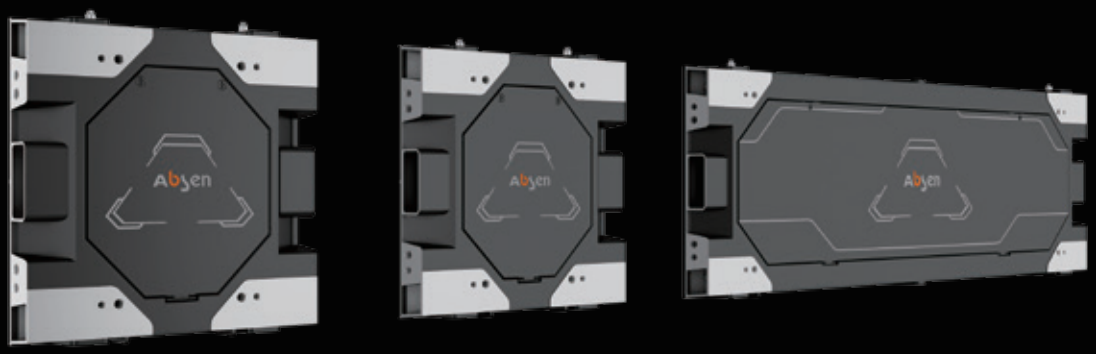

3+1+1 Design
Flexible Modular Structure

Front & Rear Maintenance
Module, PSU, Receiving Card, Etc.

700 / 3000nits
Dual Brightness Configuration

Optional Non-Magnetic
Dust-Free Solution

Creative Shape
Curved, Right-Angle & Irregular Solutions

Wireless Connectivity
Easy Module Removal

A5C+ Calibration Technology
Enhanced Screen Uniformity

Energy-saving Technology
Efficient Energy-Saving

Ready-to-use Panel with Superior Quality

Experience the next level of LED displays with Absen's unique triangular design. Our technology ensures unmatched stability, safety, and reliability, making every display stand out regardless of the setting. With the versatility of our 3+1+1 configuration, we make inventory management seamless for our esteemed clientele. Choose Absen and revolutionize your visual storytelling.

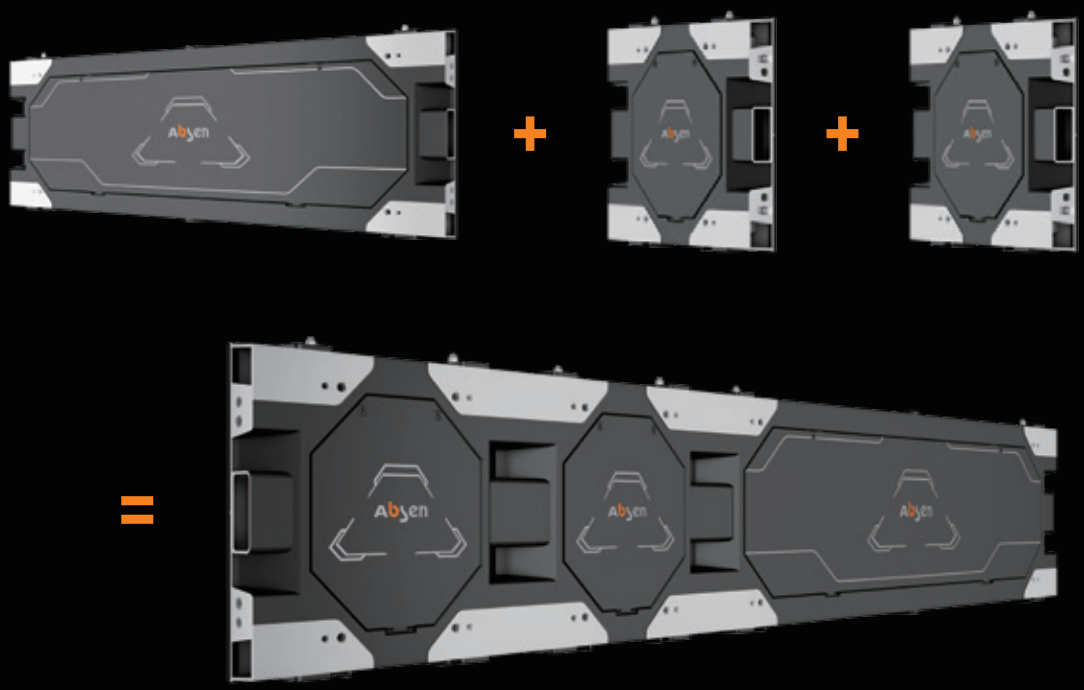

A5C+ Calibration Technology

Dive into a visual spectacle with Absen's K V3 series powered by A5C+ technology.
Experience unparalleled screen harmony, true-to-life colors, and captivating imagery that comes to life.

Before Correction

A5C+ calibration technology

After Correction

Amazing Color Management Technology

Step into Absen's realm of unmatched color brilliance. With our cutting-edge color tech, expect colors that resonate deeply, pristine clarity, shadows with depth and subtlety, and unrivaled accuracy in every shade.

Before Processing

After Processing

3840Hz
High Refresh Rate

4500: 1
High Contrast Ratio*

14bit
High Grayscale

*K1.5/2.5 V3 contrast ratio: 3500:1, K1.8 V3 contrast ratio: 3000:1, K3.9 V3 contrast ratio: 4500:1

Dual Brightness Configuration

Select the perfect brightness for your environment: Opt for our Standard mode with a luminance of up to 700nits or elevate your experience with the High Brightness mode, boasting a radiant 3000nits.

700nits Normal Brightness Version
For indoor use in brand chain stores, shopping mall, etc.

3000nits High Brightness Version
For scenarios severely affected by ambient light, such as shopping mall exterior windows, etc.

Anti-Blue Light and Anti-Radiation

Experience visual comfort with Absen's TÜV Rheinland-certified displays, meticulously designed to reduce harmful blue light. Paired with our Class B electromagnetic standards, immerse yourself in a seamless and health-conscious viewing journey.

Low Blue Light

- TÜV Rheinland low blue light certification
- Protecting eyes from high-energy short-wave blue light

EMC Class B

- Civil use level
- Prevent harm to the human body caused by excessive electromagnetic radiation

Energy-Saving Technology

Automatically turn on the black screen energy-saving mode after cutting off the signal source, it achieves efficient energy conservation, merging sustainability with cost efficiency.

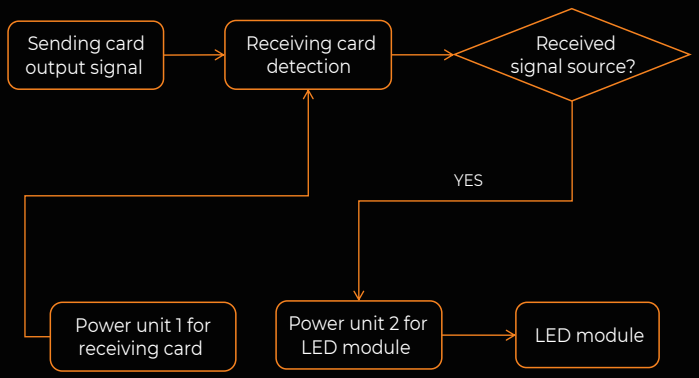

Energy Saving **50%~70%**
Standby state

Remote Monitoring, Cluster Management

Elevate your display experience with smart module options. Enhance efficiency and gain real-time insights into your product's performance. Stay in control and effortlessly manage any situation with ease.

*Smart module solutions are optional

Lightweight Design

Experience our sleek panel, measuring just 39.5mm in thickness and boasting a lightweight design at 25kg/m2.

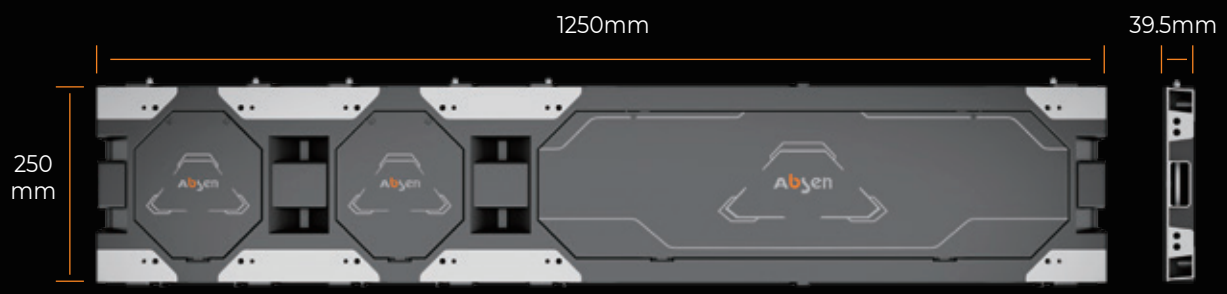

39.5mm
Ultra-thin design

25kg/m²
Ultra-lightweight

Wireless Connectivity Design

Dive into seamless connectivity with our wireless connector innovation.
Eliminate cable chaos and relish in swift setup and takedown.

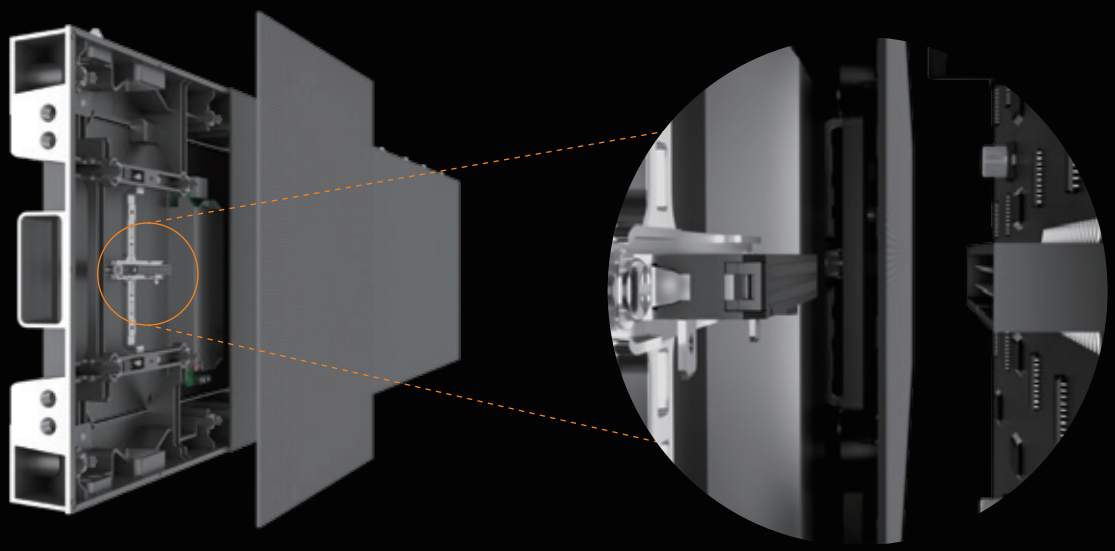

• Wireless Design Inside the Panel

Rotatable Installation for Panels

Experience limitless design possibilities with Absen's adaptable rotating cabinet.
Craft breathtaking visuals that align with your vision, enhanced by our module's seamless 90° rotation.
Dive into a world of unbroken, captivating displays with Absen.

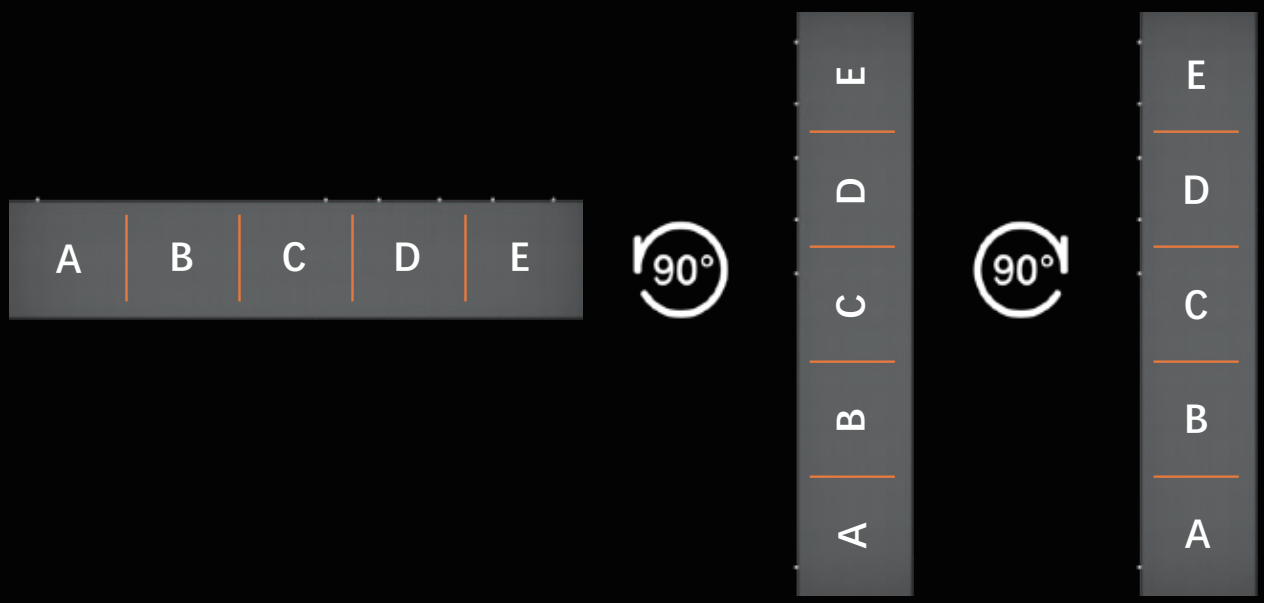

*Based on the front of the panels, after rotation, the smaller panels remain at the top of the main panel

Flexible Assembly, Convenient Connectivity

Enjoy seamless assembly with our intuitive clockwise module setup and customizable cabinet connectors.

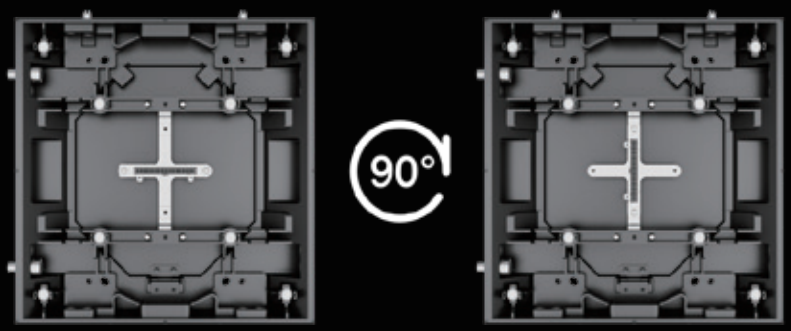

- During installation, modules effortlessly turn 90° clockwise, while the wireless connectors smoothly align with the module's surface.

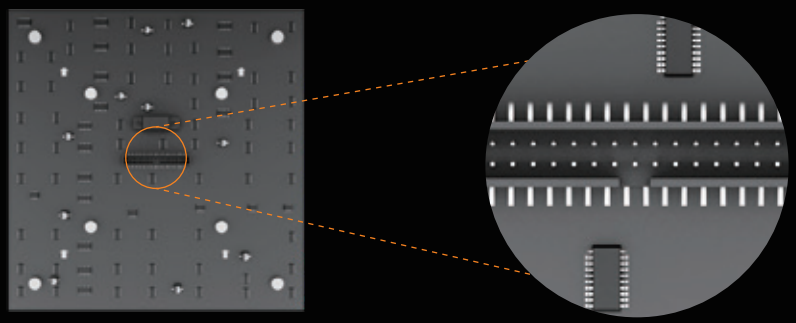

- Design engineered for reliability, safeguarding against module short circuits.

Flexible Splicing

Unleash your creativity with our product's exceptional adaptability. Discover endless opportunities for your concepts, seamlessly fitting any environment.

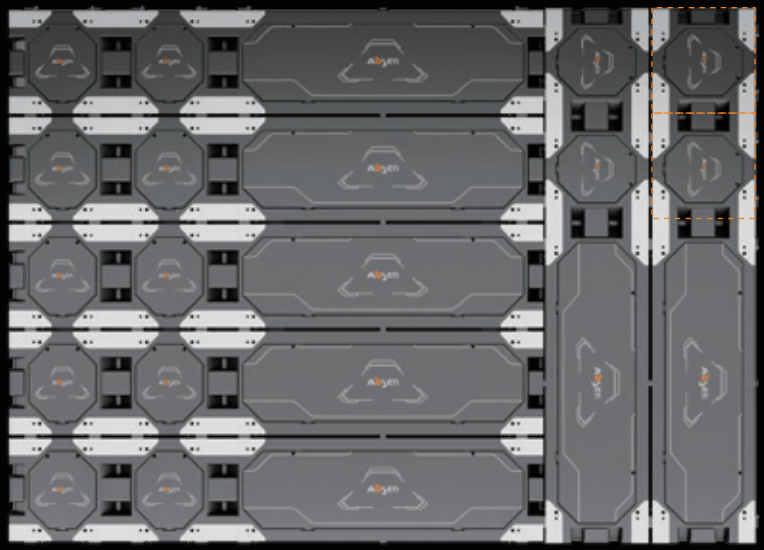

90° Rotational Installation

Experience the flexibility of our cabinet supports with a rotational setup. Ensure your smaller cabinets are securely positioned on top during vertical installations.

Anti-Collision Lamp Design

Introducing the K V3 series: Engineered with a unique anti-bump lamp mechanism, it shields the LED beads from damage during transit and regular usage, ensuring superior durability and steadfast performance.

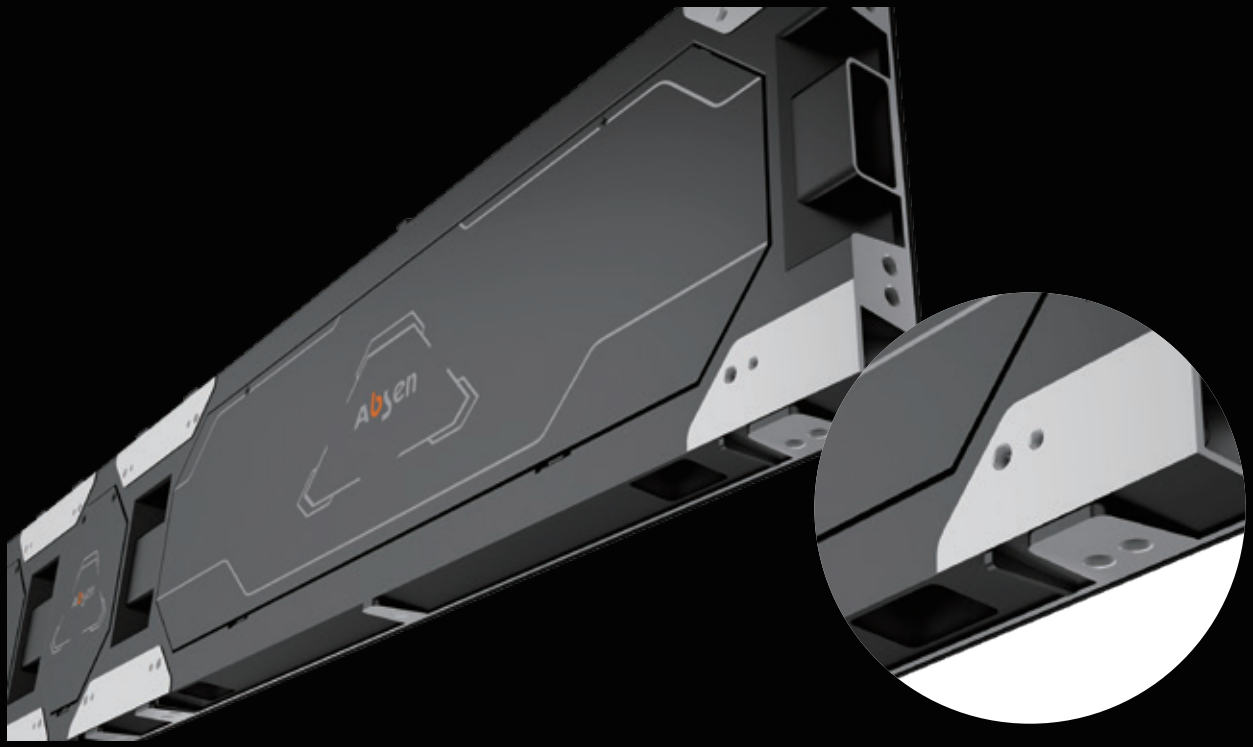

- Lamp design featuring a protective raised structure for anti-bump resilience.

Magnetic-Free Solution

Transform your viewing with our non-magnetic technology.
Experience pristine clarity that stands the test of time.

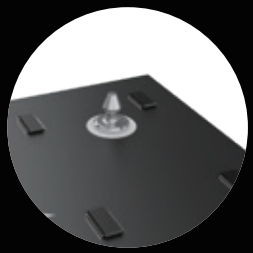

- Non-magnetic Structural Design

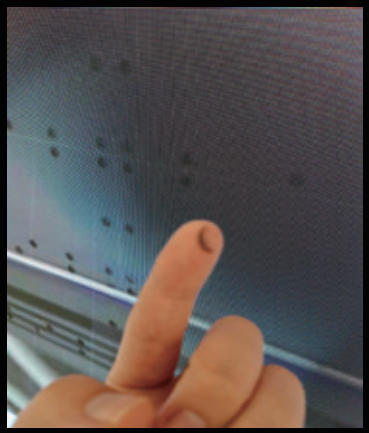

- Standard Magnetic Module
  (With noticeable screen imperfections)

- Non-Magnetic Structural Design Module
  - Ensuring a Pristine Display

*Non-magnetic solutions are optional

Graceful L-Shaped Splicing

Unveiling our product with a signature right-angle and column aesthetic, transforming spaces with a visual allure that demands attention.

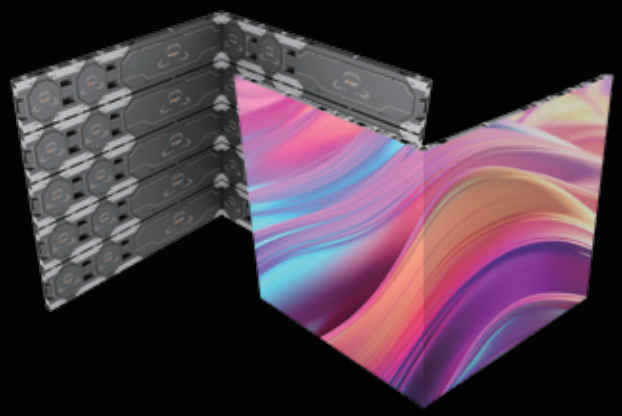

- L-Shaped Corner Display

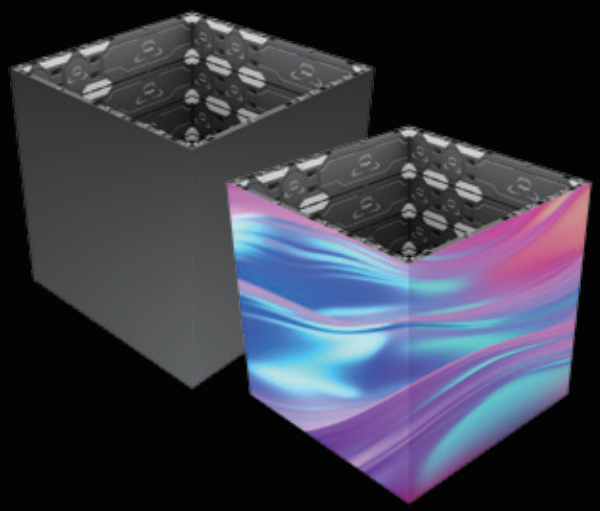

- Wrapped Column Diagram

Versatile Assembly for Any Shape

K1.8 V3 and K2.5 V3 support the combination of soft and hard module splicing,
allowing for limitless creative possibilities and effortless creation of your unique display forms.

- Soft and Hard Modules Splicing

Sleek and Artistic Curves

Unleash endless creativity with K1.8 V3 and K2.5 V3! Seamlessly merge soft and hard modules to effortlessly craft your distinct display masterpiece.

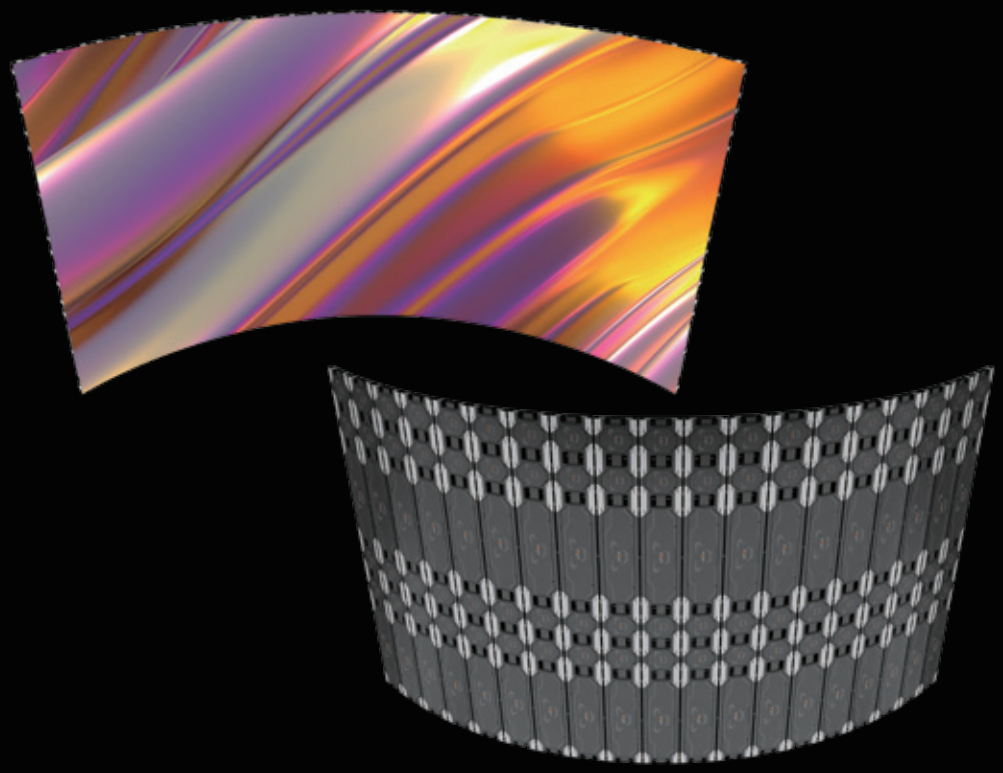

Elegant, Ultra-Thin Trim Pieces

Experience elegance like never before with our Ultra-Thin Bezel Design*. Its innovative configuration conceals side wiring and panel structure, elevating your screen's sophistication to unparalleled heights.

Starry Gray
Ultimate Premium Experience

5mm Thickness
Ultra-thin design

Metal Spraying Process
Delicate and smooth,
No screw holes on the side

*Trim pieces solutions are optional

Ultra-Slim Wall Mount Solution

Discover the future of wall-mounted elegance: sleek, ultra-slim at less than 72mm.
Transform your space with our gracefully minimalist design.

- Total Thickness: **<72mm**

- Thickness of Frame Kit: **30mm**

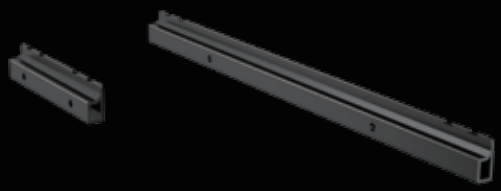

- 250mm/750mm Back Strap

- Hook up

Hanging Installation

Experience the versatility of our hanging installation solution.
Tailored for a variety of applications, it takes your setup to the next level.

• Installation with All-Black Hanging Bar

• 250mm/750mm Hanging Bar

Stacking Installation

Seamlessly transform your space with our steel floor installation. Designed for easy personalization.

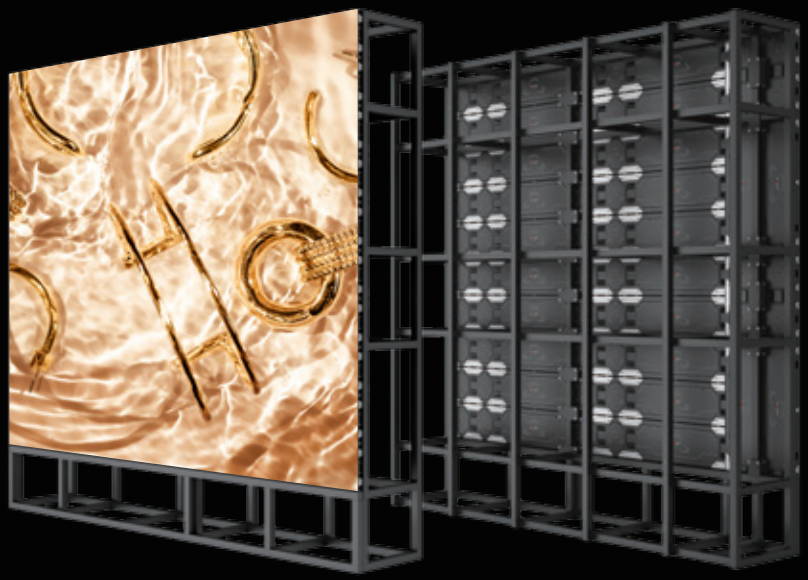

• Installation with All-Black Hanging Bar

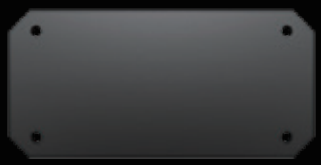

• Front Installation Connecting Plate

• Rear Installation Connecting Plate

Full Front Maintenance

Enjoy streamlined maintenance with our all-in-one front access design.
Say goodbye to dedicated maintenance channels and optimize your space.
From modules and PSU to receiver cards and HUB boards, everything is effortlessly accessible from the front.

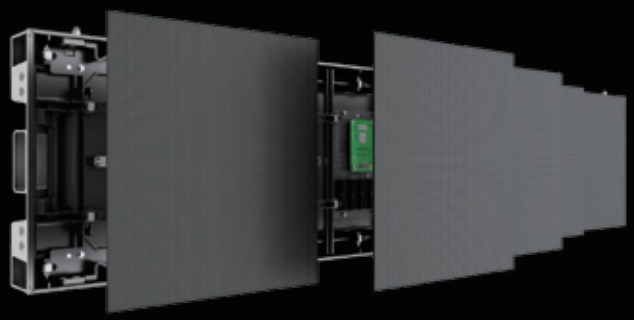

Single-Tool Maintenance
Cross Screwdriver

Full Rear Maintenance

Streamlined rear-access maintenance ensures hassle-free equipment care and consistent, uninterrupted performance. All modules, PSUs, receiver cards, and HUB boards are optimized for this seamless rear maintenance.

Single-Tool Maintenance
Cross Screwdriver

Primary Retail Application Use Cases

Chain Store

4S Car Dealership

Mall

Compact Display Solution

And More Application Scenarios.....

Safe & Stable

Standard manufacturing process and a number of quality tests ensure safe operation of K V3 series.

Reliable Raw Materials

High quality LED lamp,
power box,
and other accessories

Standard Manufacturing Process

Adheres to a standard manufacturing process to ensure product quality

Quality Control Throughout the Whole Manufacturing Process

18 Monitoring Links
29 Operation Processes
33 Recording Links
2285 Inspections And Tests

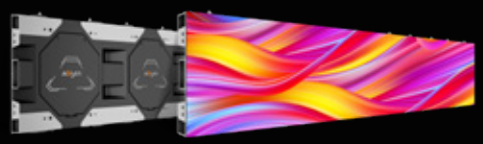

Certifications

China Compulsory Certification
Energy Conservation Certification
Pass performance/ blue light hazard/ photobiology test, etc.

Long Service Life

Pursue precision and high quality
Energy efficiency, long service life

Save Operating Cost

Stable product quality
Low operational risks
Low operating and maintenance costs

Professional Service, Exceptional Experience

Absen has established a worldwide network, enabling the delivery of timely and expert local services.

Comprehensive Support

Experience a 2-year warranty, an optional extended 1~3 year warranty, lifetime maintenance, and access to 10+ professional service solutions designed to help you solve any challenges.

24/7 Response

We are available 24/7/365 with a quick response time in as little as 10 seconds

Global Coverage

Benefit from a network of 500+ Absen Certified Partners and 3,000+ Engineers, with a global reach covering most markets. Our service network is continuously expanding

One-Stop Service

Experience exclusive and expert support throughout the entire sales process, from pre-sales to post-sales

Multiple service channels

Providing service via multiple channels such as Hot line, WeChat, WhatsApp, E-mail and official website to quickly take care of service requirements

---

Service channels

Hotline: +86 400-700-3278
WeChat: 13923413428
WhatsApp: 008613923413428

Email: service@absen.com
Website: www.absen.com

Service Time (GMT+8)

24/7 Online Customer Service

Parameters

Parameters		K1.5 V3	K1.8 V3 Normal	K1.8 V3 High brightness	K2.5 V3 Normal	K2.5 V3 High brightness	K3.9 V3 Normal	K3.9 V3 High brightness
Physical Parameter	LED type	Black SMD1212	Black SMD1515	Black SMD1515	Black SMD1515	Black SMD1515	Black SMD2121	Black SMD2121
	Pixel pitch (mm)	1.56	1.89	1.89	2.5	2.5	3.9	3.9
	Panel dimensions (W*H*D, mm)	750×250×39.5/ 1000×250×39.5/ 1250×250×39.5						
	Panel resolution	480×160/ 640×160/ 800×160	396×132/ 528×132/ 660×132		300×100/ 400×100/ 500×100		192×160/ 256×160/ 320×160	
	Panel weight (kg)	4.6/ 6.2/ 7.9	4.6/ 6.2/ 7.9		4.6/ 6.2/ 7.9		4.6/ 6.2/ 7.9	
	Module size (W*H, mm)	250×250	250×250	250×250	250×250	250×250	250×250	250×250
Photoelectric parameters	Brightness (nit)	700	700	3000	700	3000	700	3000
	Refresh rate (Hz)	3840	3840	3840	3840	3840	3840	3840
	Grayscale (bit)	14	14	14	14	14	14	14
	Contrast ratio	3500:1	3000:1	4500:1	3500:1	8000:1	4500:1	8000:1
	Viewing angle (H/V, °)	160/160	160/160	160/160	160/160	160/160	160/160	160/160
	AC operating voltage(V)	100~240	100~240	100~240	100~240	100~240	100~240	100~240
	Power consumption (max./avg., W/m^2)	360/120	390/130	450/150	360/120	360/120	300/100	330/110
Application parameters	Storage temperature (°C)	– 40~ + 60						
	Operating temperature (°C)	– 10~ + 40						
	Storage humidity (RH)	10 %~85 %						
	Operating humidity (RH)	10 %~80 %						
	IP rating	IP40/IP21						
	Certificate	FCC, ETL, CE, RoHS, CCC, TUV						

*Power consumption tolerance: ±15%, according to the actual situation.

★ Shenzhen Absen Optoelectronic Co., Ltd. reserves the right to modify product design, specifications, and parameters without further notice.
Photos are used for illustration purpose only as products may differ from these photos. All rights reserved by Shenzhen Absen Optoelectronic Co., Ltd.

Absen Optoelectronic Co.,Ltd
18-20F Building 3A, Cloud Park, Bantian,
Longgang District Shenzhen, 518129, P.R.China
T: +86-755-89747399 E: absen@absen.com
F: +86-755-89747599 W: www.absen.com

Absen Inc.
7120 Lake Ellenor Drive, Orlando,
Florida 32809, USA
T: +1-407-203-8870 E: info@usabsen.com
F: +1-407-203-8873 W: www.usabsen.com

Absen GmbH
Hessenring 4c, 64546 Moerfelden-Walldorf (Frankfurt am Main),
Germany
T: +49 (0) 6105 718941-0 E: europe@absen.com
F: +49 (0) 6105 718941-29 W: www.absen-europe.com

Twitter: @LEDAbsen
Facebook: @LEDAbsen
LinkedIn: Absen
Instagram: absenled